Indoor Omnidirectional Antennas
Vertical Polarization

380...470

V

KATHREIN
Antennen · Electronic

- The antennas need no additional groundplane.

800 10277: VPol Indoor 380–405 360° 2dBi
800 10339: VPol Indoor 405–430 360° 2dBi
800 10632: VPol Indoor 450–470 360° 2dBi

Type No.	800 10277	800 10339	800 10632
Frequency range	380 – 405 MHz	405 – 430 MHz	450 – 470 MHz
Polarization	Vertical	Vertical	Vertical
Gain	Approx. 2 dBi	Approx. 2 dBi	Approx. 2 dBi
Impedance	50 Ω	50 Ω	50 Ω
VSWR	< 2.0	< 2.0	< 2.0
Max. power	50 W (at 50 °C ambient temperature)		
Input	1 x N female		
Protection class	IP 30		
Weight	429 g		
Packing size	267 x 267 x 114 mm		
Diameter	258 mm		
Height	77 mm (without connector)		

Material: Reflector: Aluminium.
Radome: High impact polystyrol, colour: White.
Additional painting is possible.

Mounting: Three holes in the base enable a mounting on the ceiling. Two types of screws are supplied. For the N connector a hole in the ceiling with a diameter of 35 mm is required.

Grounding: All metal parts including the inner conductor are DC grounded.

Available accessories: Power splitters (380 – 512 MHz)

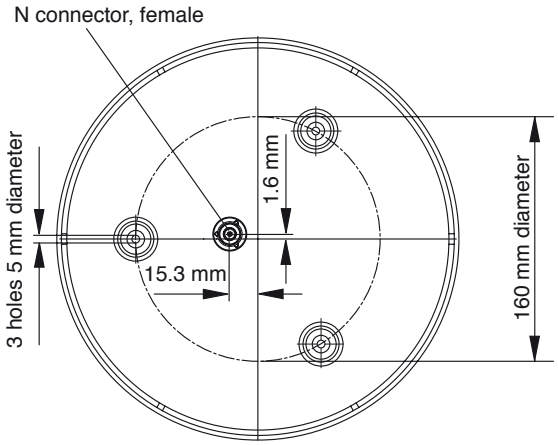

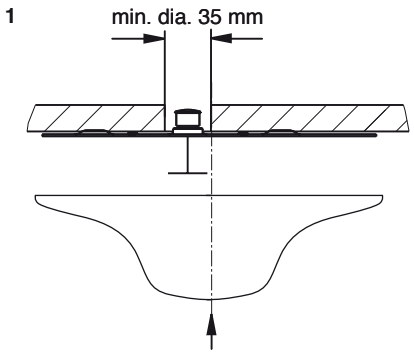

Press radome against installed reflector.

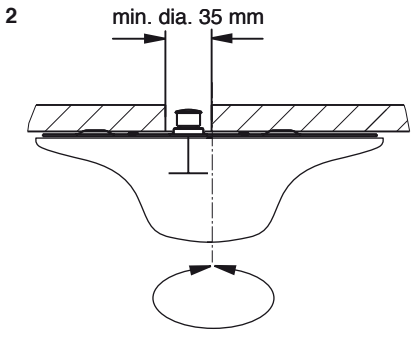

Rotate radome until it locks in place.

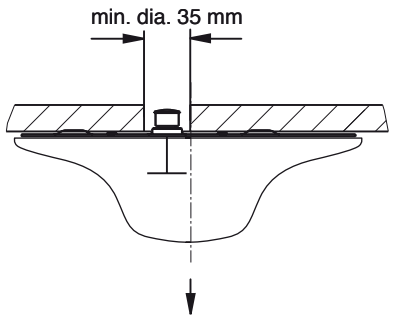

Pull downwards to remove radome.

936.2817/b Subject to alteration.

KATHREIN-Werke KG · Anton-Kathrein-Straße 1 – 3 · P.O. Box 10 04 44 · 83004 Rosenheim · Germany · Phone +49 8031 184-0 · Fax +49 8031 184-973